EDFOU 2



EDFOU 2 in brushed bronze without lampshade

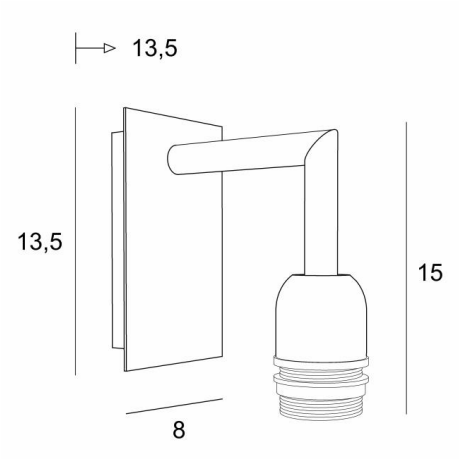

EDFOU 2 is a simple wall light for lampshade. It is well balanced and its elegance allows it to be easily integrated into an interior
This fixture is made of brass and comes in two sizes. She is available in a variety of beautiful finishes
EDFOU 2 can be placed upside down but only with lampshades from our **RAMOSE** range
For the lampshade, which will create a warm atmosphere and a beautiful luminosity, we propose you to choose between many shapes, fabrics, materials and colors
There is a smaller model, see EDFOU 1

OVERALL SIZES

H15cm L8cm |→13,5cm

BASE

Plate : 8 x 13,5cm
Box : 6 x 11,5 x 2cm

TECHNICAL DATA

One E27 fitting with ring
Dimmable wall light
A fixing plate for the wall box (plan in PDF)

AVAILABLE METAL FINISHES AND CODES

28 - Light bronze - 1126 028

29 - Brushed bronze - 1126 029

33 - Brushed nickel - 1126 033