Stéphane Davidts

EDFOU 1



EDFOU 1 in brushed bronze without lampshade

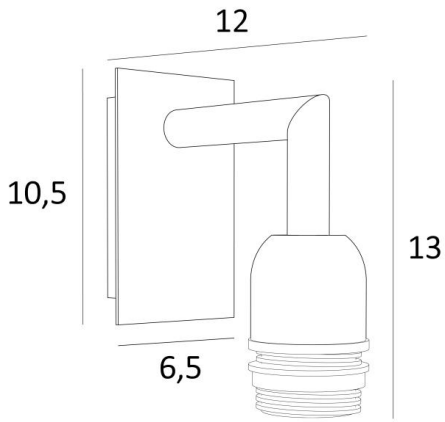

EDFOU 1 is a small and simple wall light for lampshade
She is harmonious and its elegance makes it easy to find a place for her in an interior
This lamp, entirely in brass, is presented with beautiful finishes
For the lampshade, which will create a warm atmosphere and a beautiful brightness, we suggest you to choose between many fabrics, materials and colors
There is a larger model, see EDFOU 2

OVERALL SIZES

H13cm L6,5cm |→12cm

BASE

Plate : 6,5 x 10,5cm
Box : 4,5 x 8,5 x 2cm

TECHNICAL DATA

One E27 fitting with ring
Dimmable wall light
A fixing plate for the wall box (plan in PDF)

AVAILABLE METAL FINISHES AND CODES

28 - Light bronze - 1125 028

29 - Brushed bronze - 1125 029

33 - Brushed nickel - 1125 033

