Stéphane Davidts

KERMA SQUARE 1



KERMA SQUARE 1 in brushed bronze with structure in black epoxy

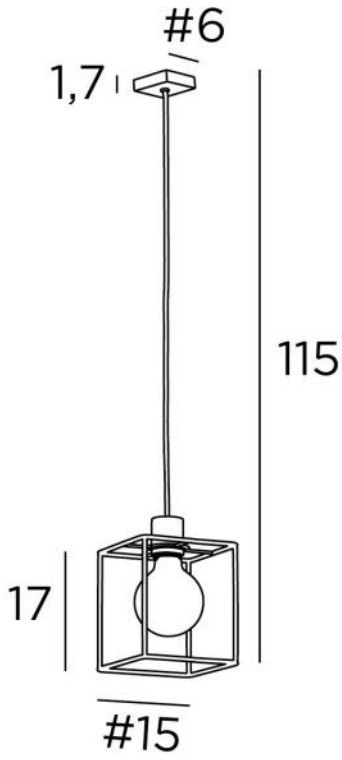

KERMA SQUARE 1 is a small suspension designed to be fitted with a bulb and a square metal structure

OVERALL SIZES

H115 cm #15cm

BASE

#6 x 1,7cm

TECHNICAL DATA

One E27 fitting with ring. Dimmable suspension
LED bulb Gold Ø125mm dim code 6834 000 (option)
LED bulb Frosted Ø95mm dim code 6827 000 (option)
The bottom of the suspension is 160cm from the floor with a ceiling height of 275cm. On request, we can adapt the cable to another ceiling height. ORDER FORM to be filled in
A fixing plate for the ceiling base (plan in PDF)

AVAILABLE METAL FINISHES AND CODES

02 - Structured black - 4931 002

29 - Brushed bronze - 4931 029

METAL STRUCTURES AND CODES

KERMA STRUCTURE : #15 - 15 - 17cm (x1)
Code : 4999 001 (white epoxy)
Code : 4999 002 (black epoxy)
Code : 4999 025 (gold epoxy)

