Stéphane Davidts

MAYA



MAYA in brushed nickel with lampshade in Coton Violet (fabric from category 1)

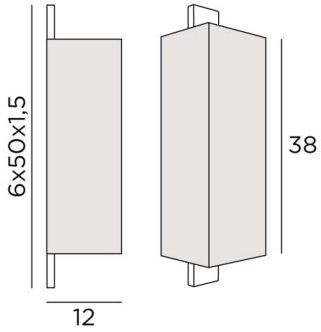

MAYA # is a wall light with a rectangular half-screen all in height that envelops a long and imposing wall box overflowing with the lampshade
Not visible are two E27 fittings that generously diffuse a powerful light onto the wall
To personnalise this wall light and to make the lampshade, we offer you a large choice of fabrics, materials and colours

OVERALL SIZES

H50cm L14cm |→12cm

BASE

6 x 50 x 1,5cm

TECHNICAL DATA

Two E27 fittings
Dimmable wall light
A fixing plate for the wall box (plan in PDF)

AVAILABLE METAL FINISHES AND CODES

28 - Light bronze - 1561 028

29 - Brushed bronze - 1561 029

33 - Brushed nickel - 1561 033

LAMPSHADE : SIZES & CODE

12x14x12 - 12x14x12 - 38cm

Code: 1562 + fabric code
We propose more than 180 fabrics/materials/colors for lampshades

